MP 163 two way valve



A. SOLENOID VALVES

- Directly driven 2/2 valves,
- medium: air,
- differential pressure: 0–0,35 Bar,
- maximum pressure: 1 Bar,
- ambient temperature: -20 ÷ +55 °C,
- fluid temperature: -25 ÷ +90 °C,
- KV factor 21 l/min,
- response time: open 5–20 ms,
- sealing: NBR,
- valve can operate in any position,
- high reliability, long life,
- orifice DN 12 mm,
- consumption 9 Watt,
- el. connection: ISO4400, IP65,
- voltage tolerance: ± 10 %.

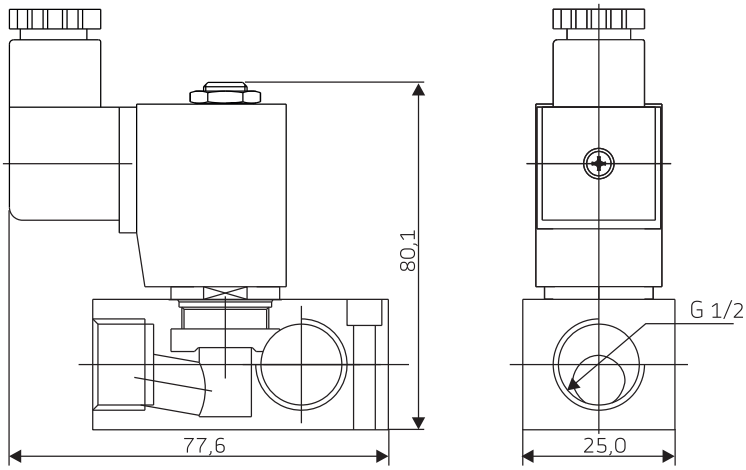

MP 163–4 four way valve

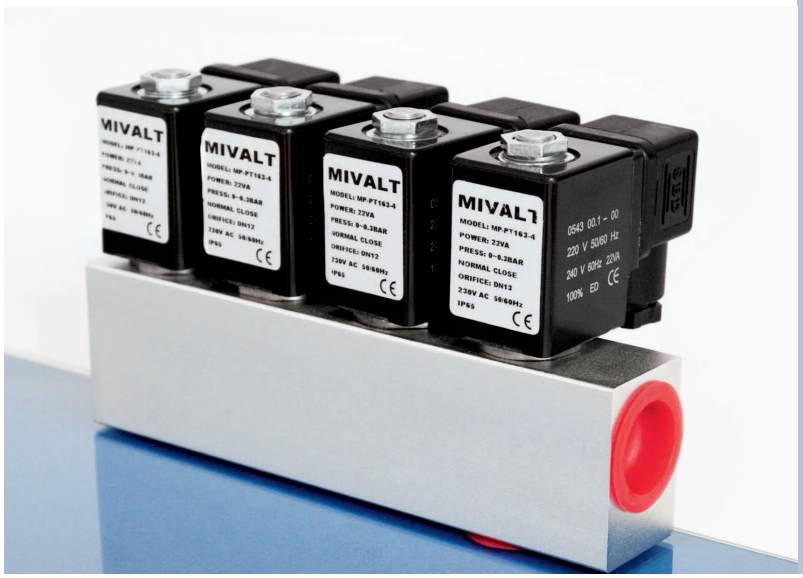

A. SOLENOID VALVES

- Directly driven 2/2 valves,
- medium: air,
- differential pressure: 0–0,35 Bar,
- maximum pressure: 1 Bar,
- ambient temperature: -20 ÷ +55 °C,
- fluid temperature: -25 ÷ +90 °C,
- KV factor 21 l/min,
- response time: open 5–20 ms,
- sealing: NBR,
- valve can operate in any position,
- high reliability, long life,
- orifice DN 12 mm,
- consumption 9 Watt,
- el. connection: ISO4400, IP65,
- voltage tolerance: ± 10 %.