A. SOLENOID VALVES

MP-T two way teflon valve

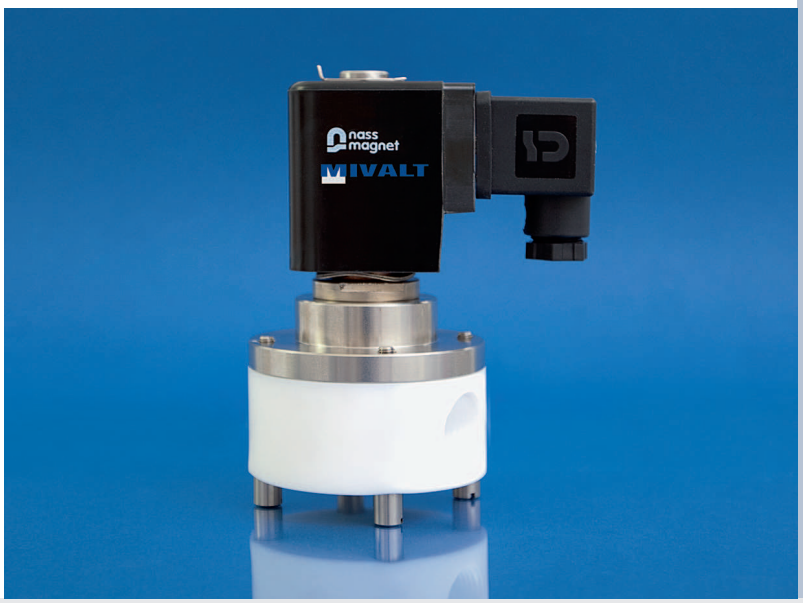

- Directly driven 2/2 valve,
- all teflon body,
- PTFE separation membrane,
- for aggressive chemicals or ozone,
- response time: open 5–20 ms, close 25–100 ms,
- el. protection class: IP65,
- voltage tolerance: ± 10 %.

Type	Connection	Orifice	Voltage typee
MP-T	BSP 1/4"	2,5	AC
		4,0	DC
		6,0	
	BSP 3/8"	4,0	
		6,0	
		8,0	
	BSP 1/2"	6,0	
		9,0	
		12,0	
	BSP 3/4"	10,0	
		15,0	

Model	Orifice (mm)	Coil	Temp. range	Working pressure (Bar)						KV factor (L/min)
				Coil 5		Coil 6		Coil 3E		
				Gas	Liquid	Gas	Liquid	Gas	Liquid	
MP 06 (1/4")	2,5	5	-5 °C to +80 °C	4,0	5,0	-	-	1,5	4,0	1,8
	4,0			2,5	4,0	-	-	1,0	3,5	4,3
	6,0			1,0	3,0	-	-	0,5	2,0	9,5
MP 10 (3/8")	4,0	3E		2,5	4,0	-	-	1,0	3,0	5,0
	6,0			1,0	3,0	-	-	0,2	1,0	10,0
	8,0			0,5	1,0	-	-	-	-	15,0
MP 15 (1/2")	6,0	6		-	-	3,0	5,0	-	-	16,7
	9,0			-	-	1,5	3,0	-	-	25,0
	12,0			-	-	0,5	2,0	-	-	33,3
MP 20 (3/4")	10,0			-	-	1,0	3,0	-	-	26,7
	15,0			-	-	-	0,5	-	-	41,7

Model	A			H			L			Weight (kg)		
	Coil 5	Coil 6	Coil 3E	Coil 5	Coil 6	Coil 3E	Coil 5	Coil 6	Coil 3E	Coil 5	Coil 6	Coil 3E
MP 06 (1/4")	67,00	-	65,00	77,00	-	75,00	45,00	-	45,00	0,42	-	0,60
MP 10 (3/8")	68,50	-	66,50	80,00	-	78,00	45,00	-	45,00	0,42	-	0,60
MP 15 (1/2")	-	93,00	-	-	109,00	-	-	70,00	-	-	0,87	-
MP 20 (3/4")	-	96,50	-	-	116,00	-	-	70,00	-	-	1,00	-

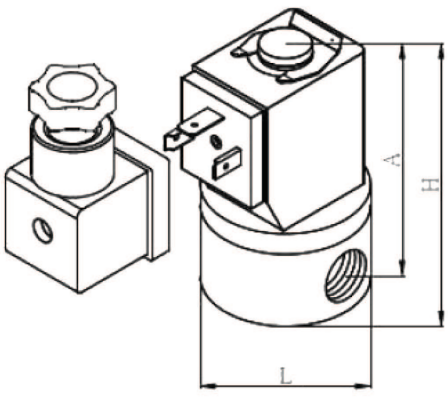

Coils	5	6	3E
AC (VA)	66/46	66/50	9,2
DC (W)	18,5	25	10